THIS DRAWING CONTAINS INFORMATION THAT IS PROPRIETARY TO J.S.T. AND SHALL NOT BE USED OR SHOWN WITHOUT WRITTEN PERMISSION.

ITEM	CONNECTOR PART NO.	DESCRIPTION
1	SVF-61T-P2.0	VL CONNECTOR - FEMALE CONTACT
2	UL1015, 14 AWG	BLACK

IPI CHECK	EOR CHECK

Applicable Tooling

APPLICATOR

Applicable Housings

NO. OF CIRCUITS	HOUSING PART NO. INNER LOCKS	HOUSING PART NO. OUTER LOCKS
1	VLP-01V	VLP-01V-1
2	VLP-02V	VLP-02V-1
3	VLP-03V	VLP-03V-1
4	VLP-04V	VLP-04V-1
4	-	VLP-04VN-1
6	VLP-06V	VLP-06V-1
8	VLP-08V	VLP-08V-1
12	VLP-12V	VLP-12V-1

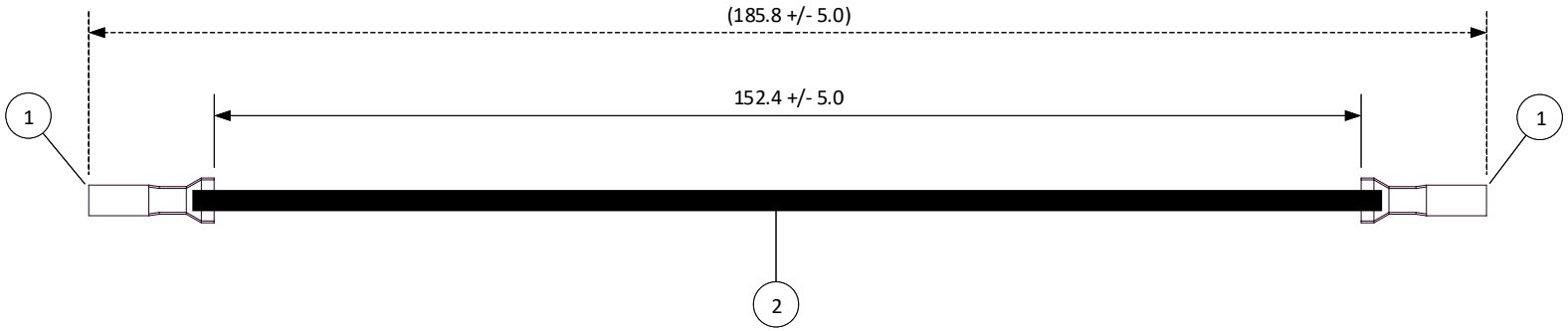

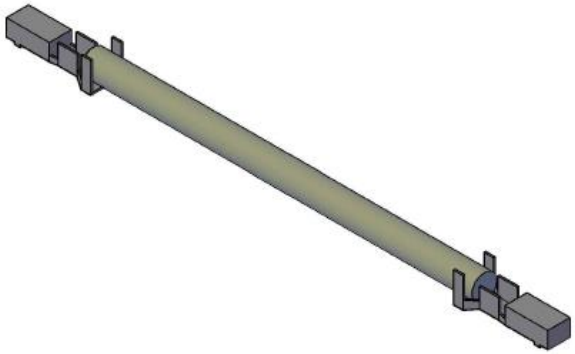

REV.	DESCRIPTION	DATE	BY

SCALE 1: 1	CUSTOMER NAME	CUSTOMER PART NO.
DIMENSIONS All dimensions are in MM with a tolerance of +/- 3.0 unless otherwise specified.	DESCRIPTION 6.2 mm Pitch VL Series Standard Leads - 6" Inside Length DOUBLE-END LEADS, F-F	
DRAWN BY STEVEN PILKINGTON	ASSEMBLY PART NO. ASVFSVF14K152	
CHECKED BY JUSTIN BAKER	DRAWING NO. & REVISION GAM-098	REVISED 3/10/2016